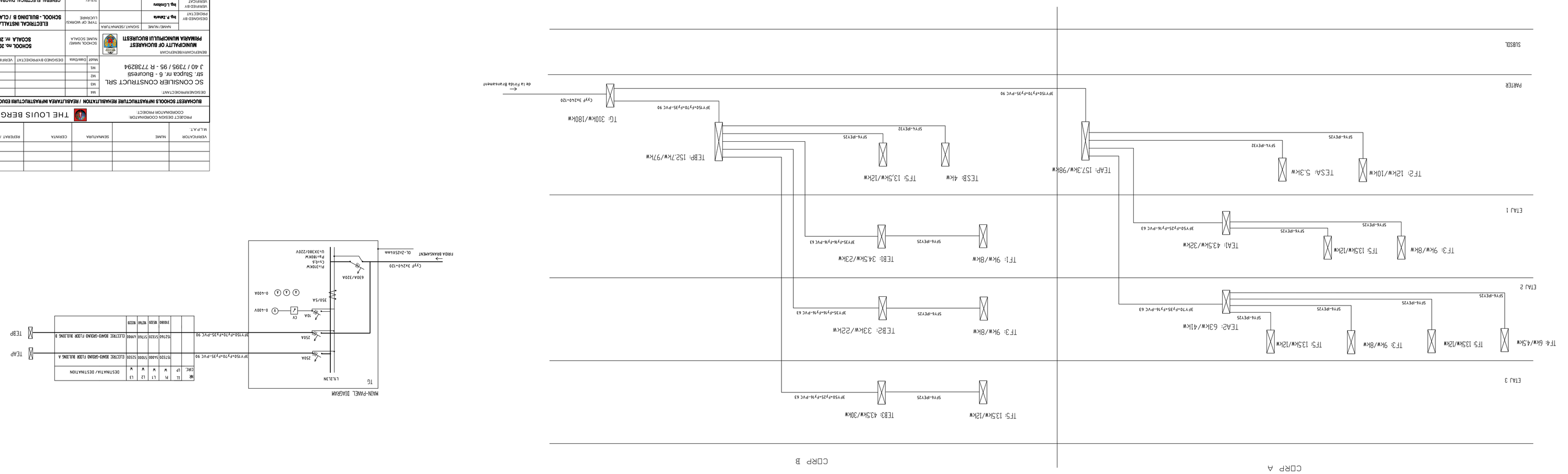

VERIFICATOR	NUME	SEMNATURA	CERINTA	REFERAT / EXPERTIZA Nr. / DATA

ALF.T.

PROIECT DESIGN COORDINATOR:
COORDONATOR PROIECT:

THE LOUIS BERGER GROUP, INC

DESIGNE/INVESTIGATIE:

NA	
NA	
NA	
NA	

BUCHAREST SCHOOLS INFRASTRUCTURE REHABILITATION / REABILITAREA INFRASTRUCTURII EDUCATIONALE IN MUNICIPIUL BUCURESTI

BENEFICIAR/BENEFICIARI:

MUNICIPALITY OF BUCHAREST
PRIMARIA MUNICIPIULUI BUCURESTI

SC CONSULIER CONSTRUCT SRL
Str. Stupca nr. 6 - Bucuresti
J 40 / 7395 / 95 - R 7736294

DESIGNED BY/PROIECTAT: | VERIFIED BY/VERIFICAT: | PROJ. DIR./DIR PROIECT:

Nivel/ Data/Data

SCHOOL NAME/ NUME SCOALA

SCHOOL no. 20, "SIMION MEHEDINTI"
SCOALA nr. 20, "SIMION MEHEDINTI"

NAME/ NUME: SIGNATURE/SEMNATURA

TYPE OF WORKS/ LUCRARI

ELECTRICAL INSTALLATIONS / LUCRARI INSTALATII

DESIGNED BY
PROIECTAT
VERIFIED BY
VERIFICAT
PROJ. DIR.
DIR PROIECT

ing. Z.Iancu
ing. L.Ivănescu
ing. Constantin Grip

TITLE/ PLANSA

GENERAL ELECTRICAL DIAGRAM / SCHEMA GENERALA DE DISTRIBUTIE
TG - MAIN PANEL DIAGRAM / SCHEMA DISTRIBUTIE TG

DEC	LP	P	W	L1	L2	L3	DESTINATIA/ DESTINATION